ZT610, ZT620

P1090551-002

1

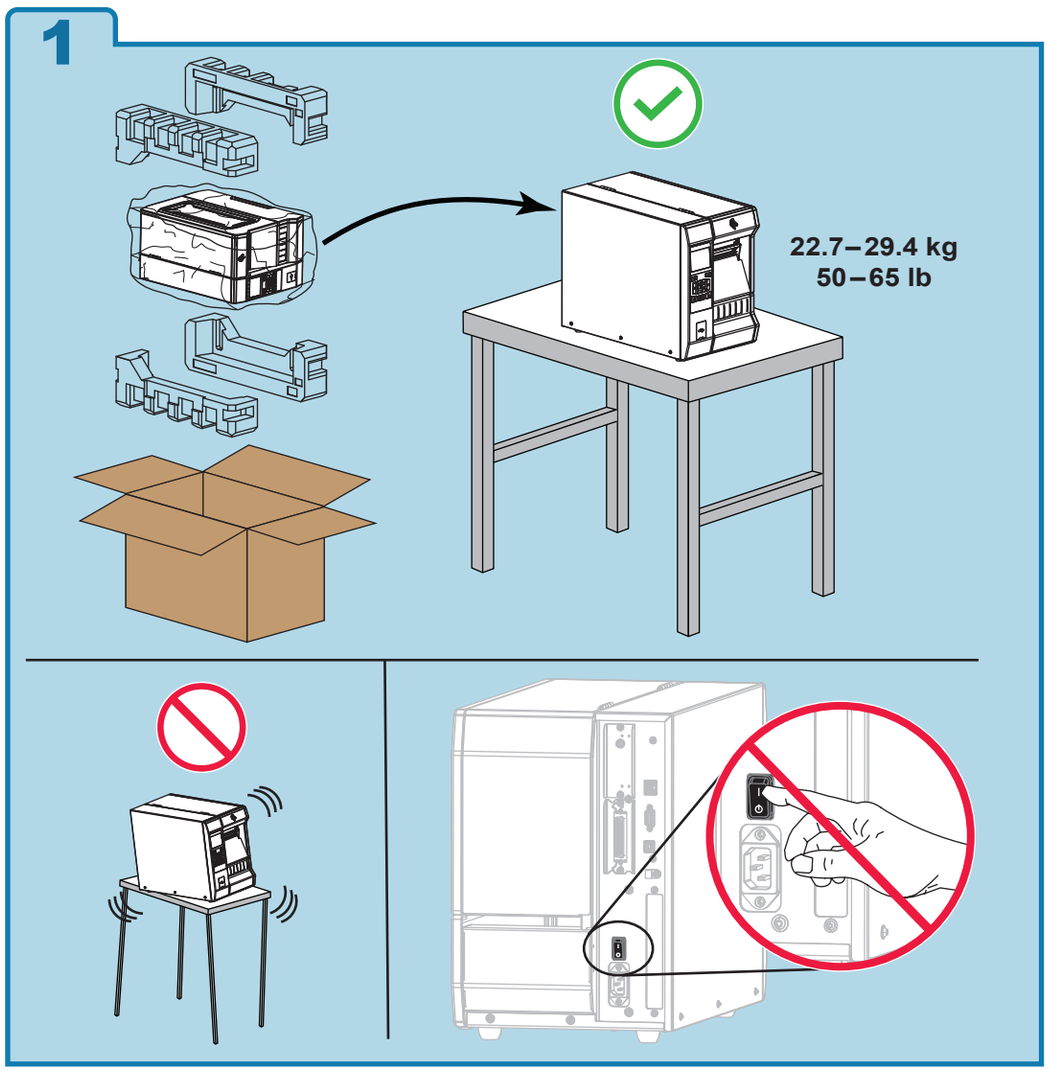

2

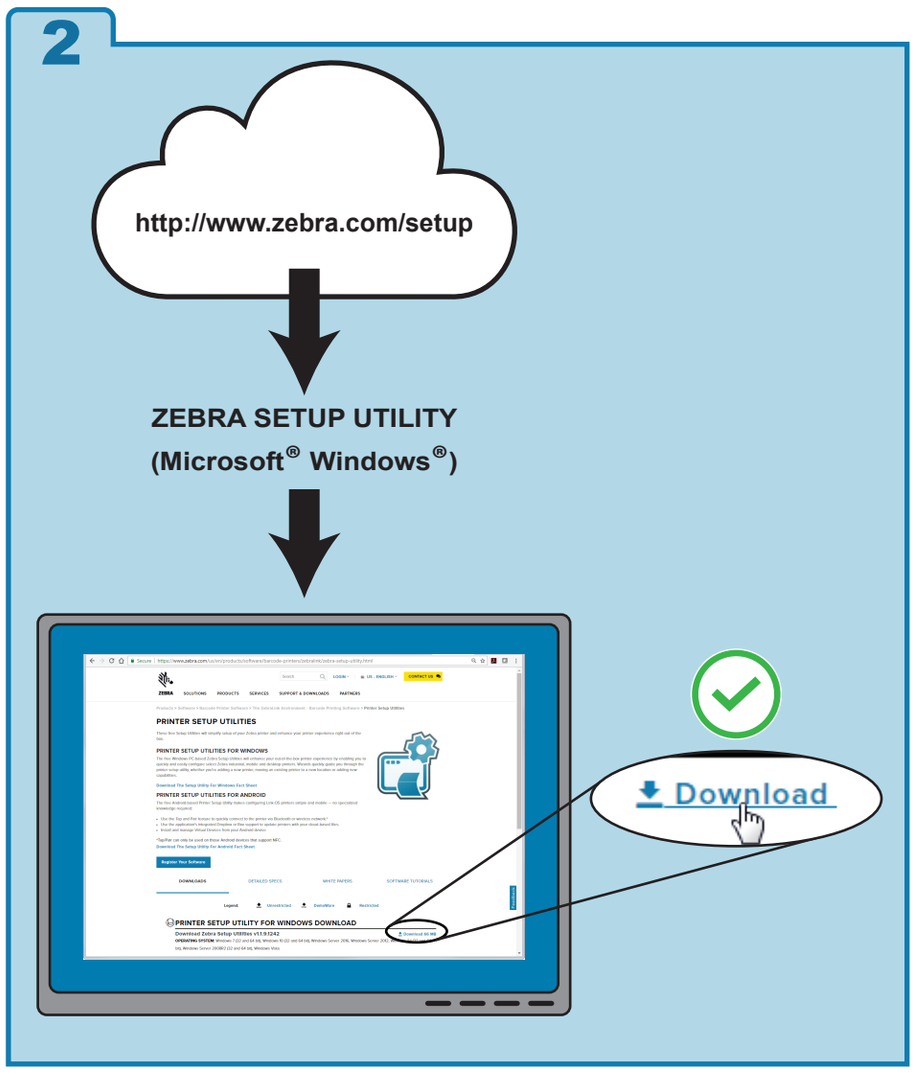

3

4

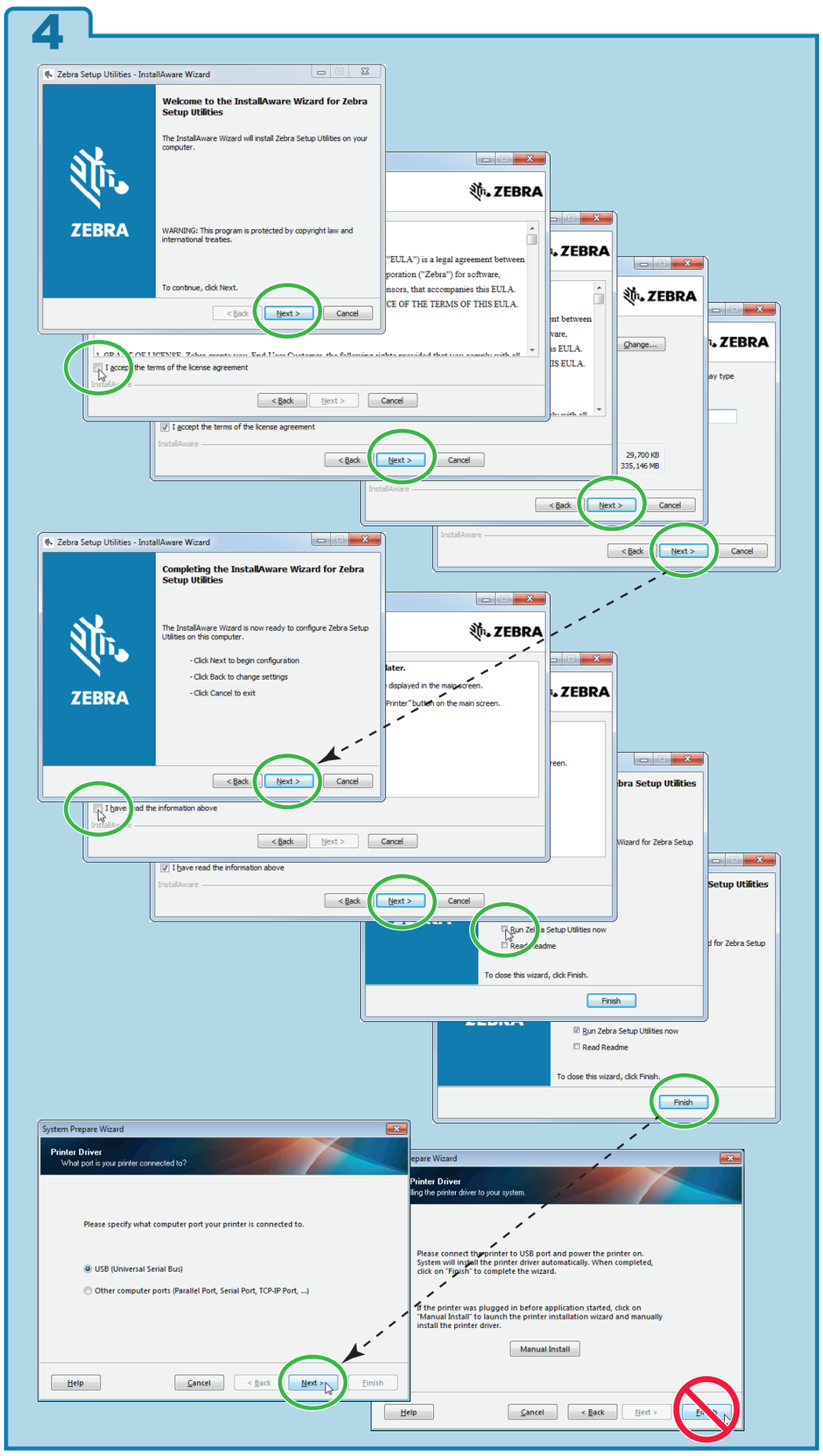

5

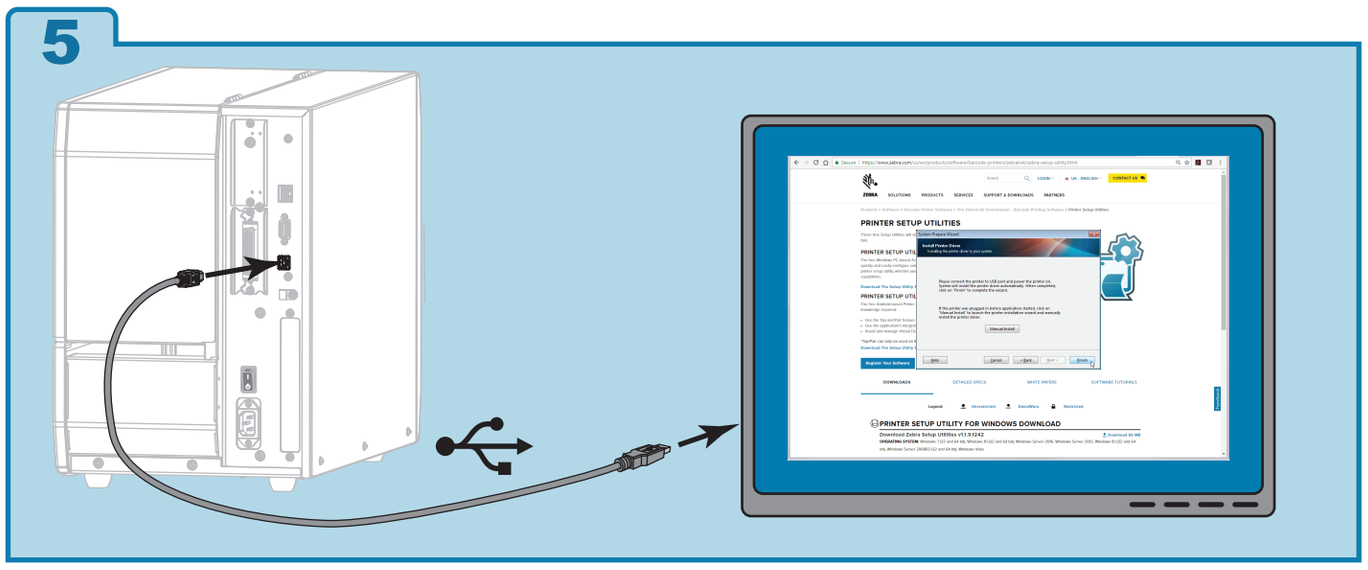

6

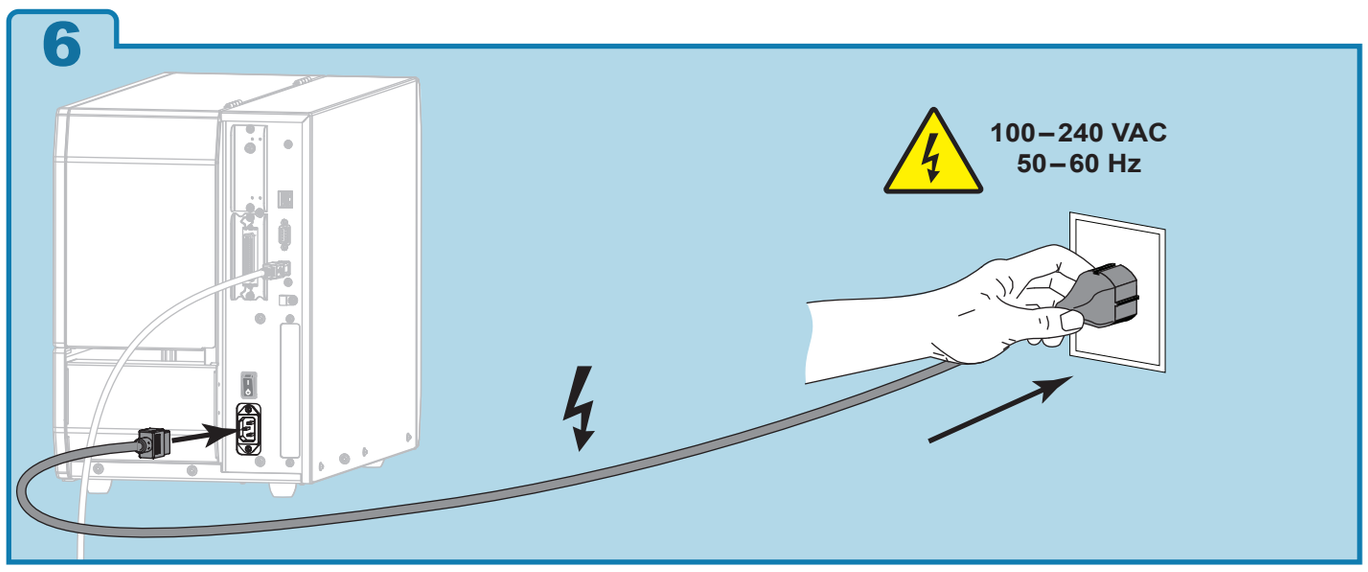

7

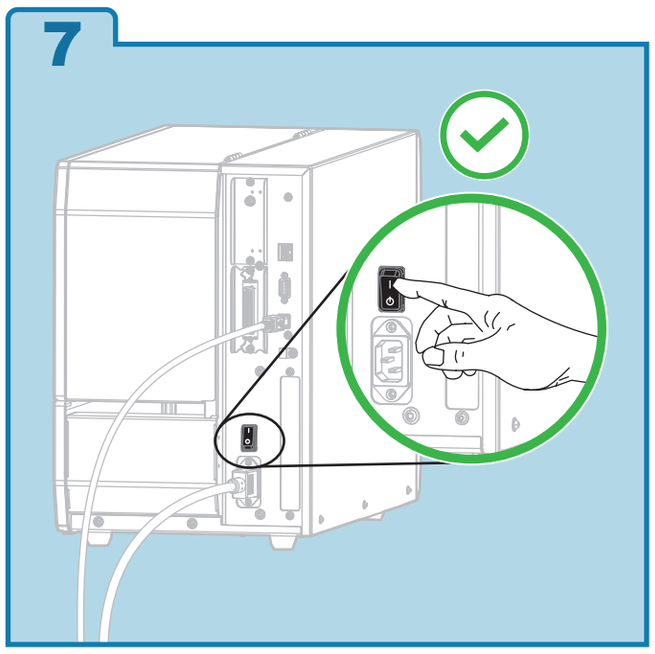

8

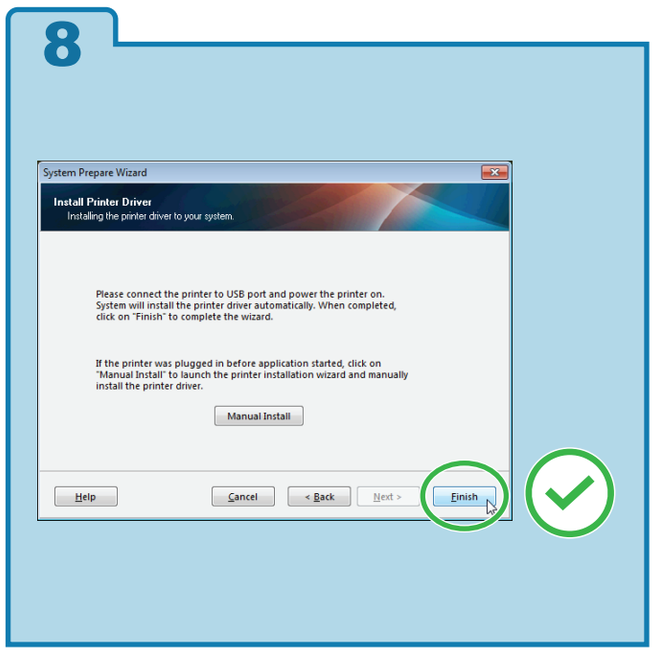

© 2018 ZIH Corp. and/or its affiliates. All rights reserved.

ZT610, ZT620

http://www.zebra.com/zt600-info

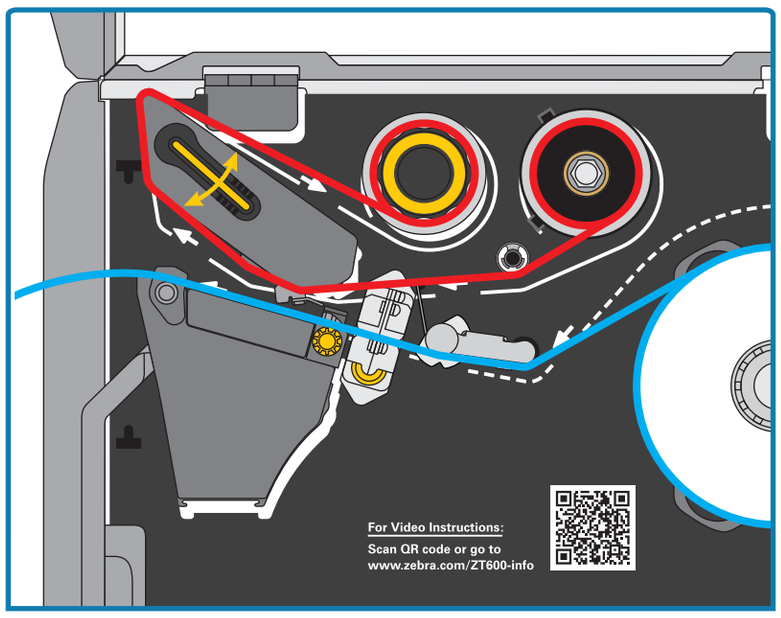

1

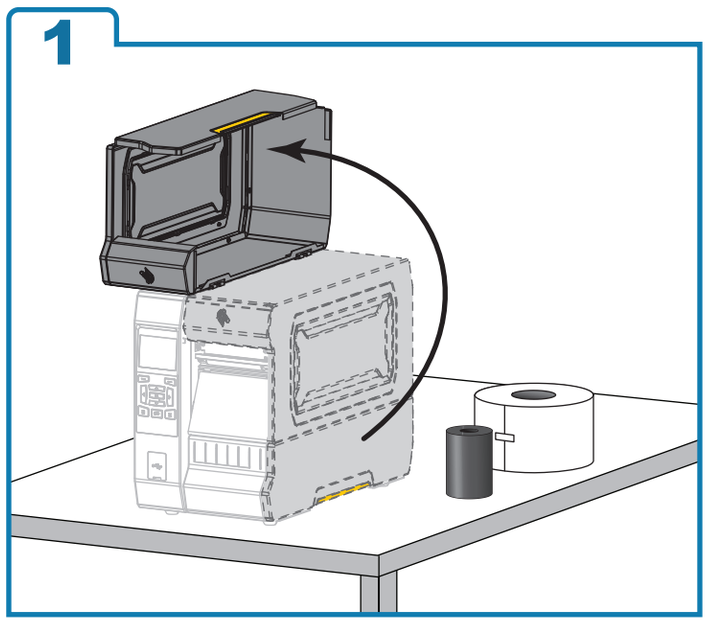

2

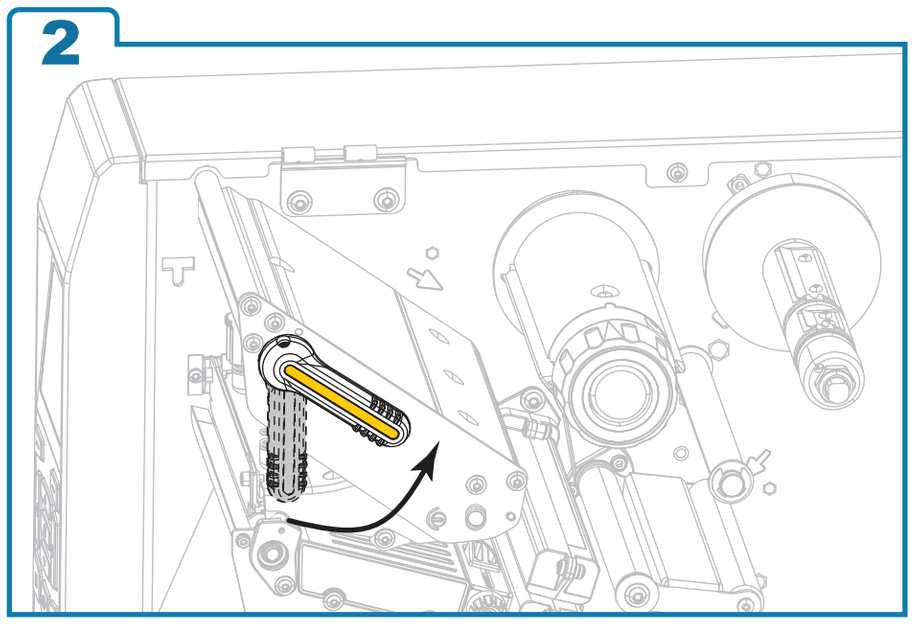

3

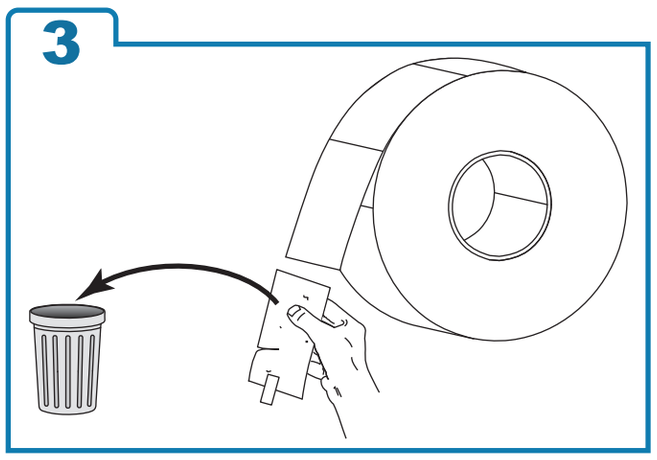

4

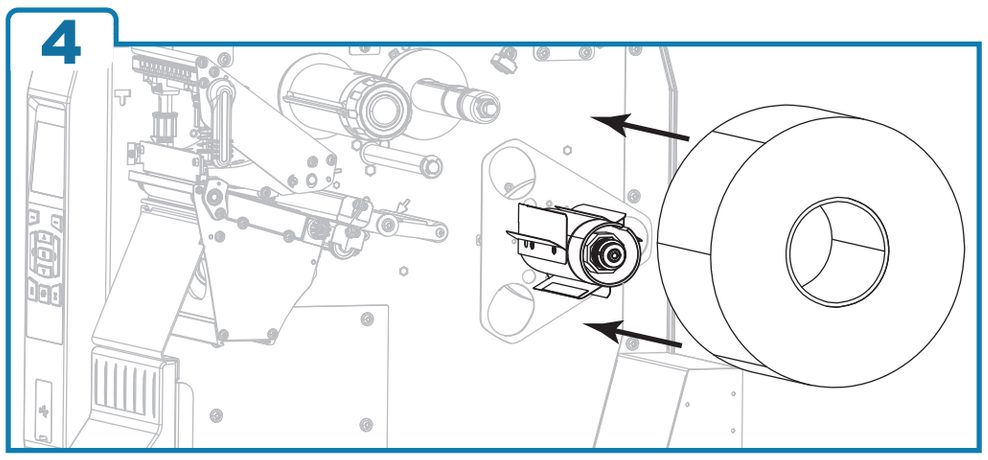

5

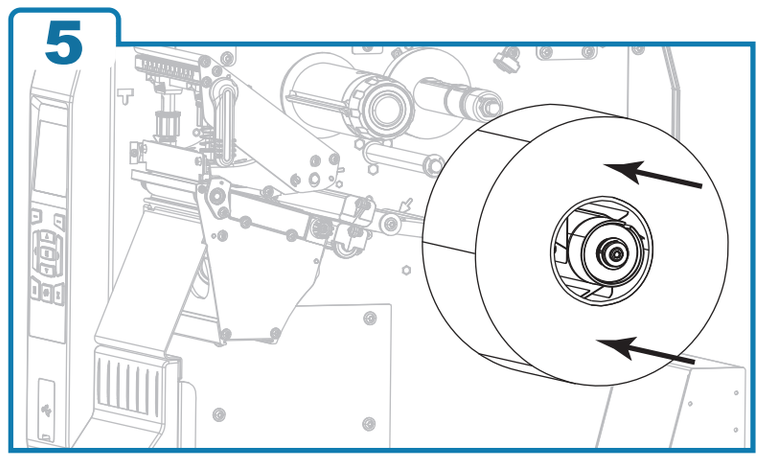

6

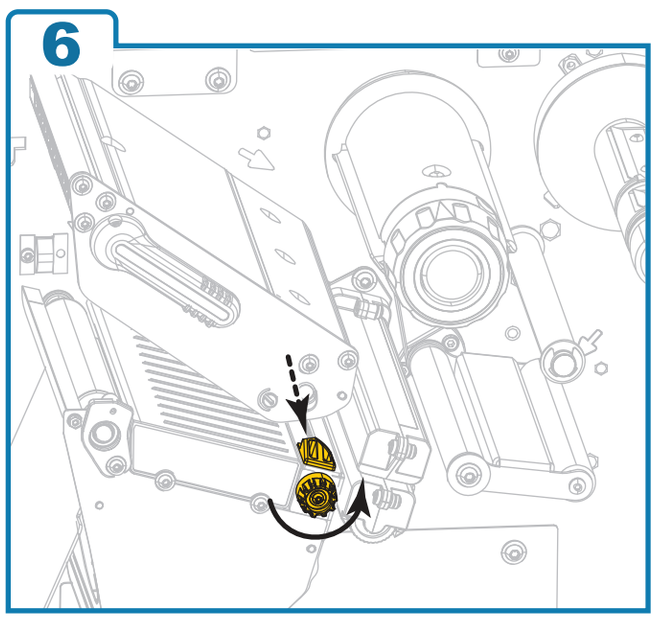

7

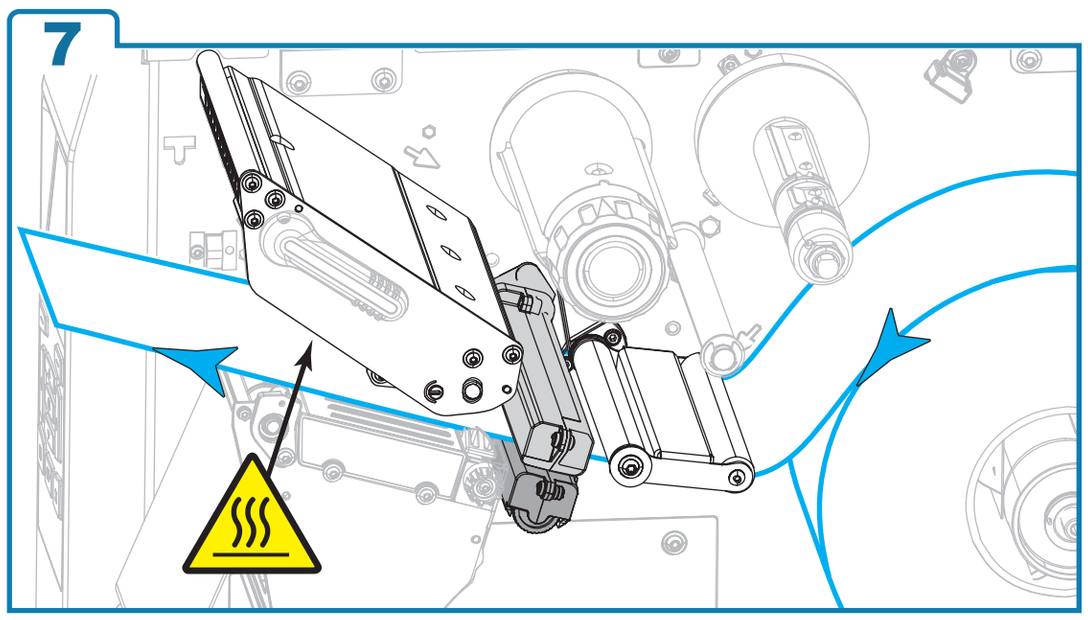

8

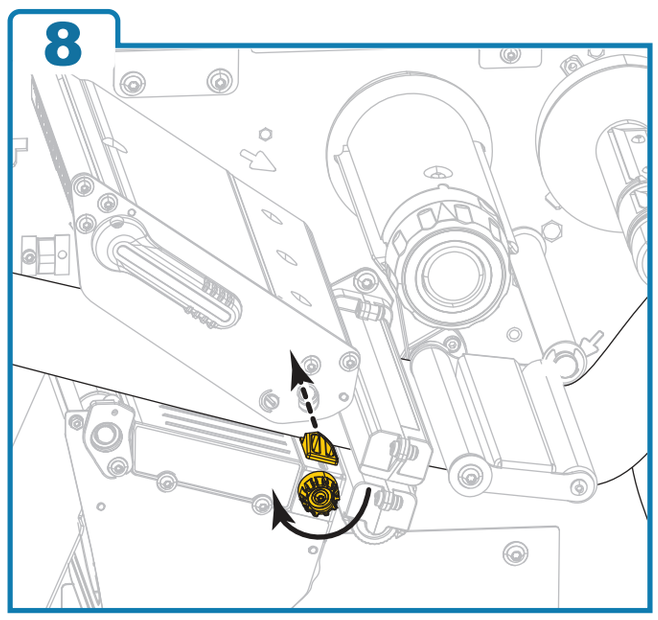

9

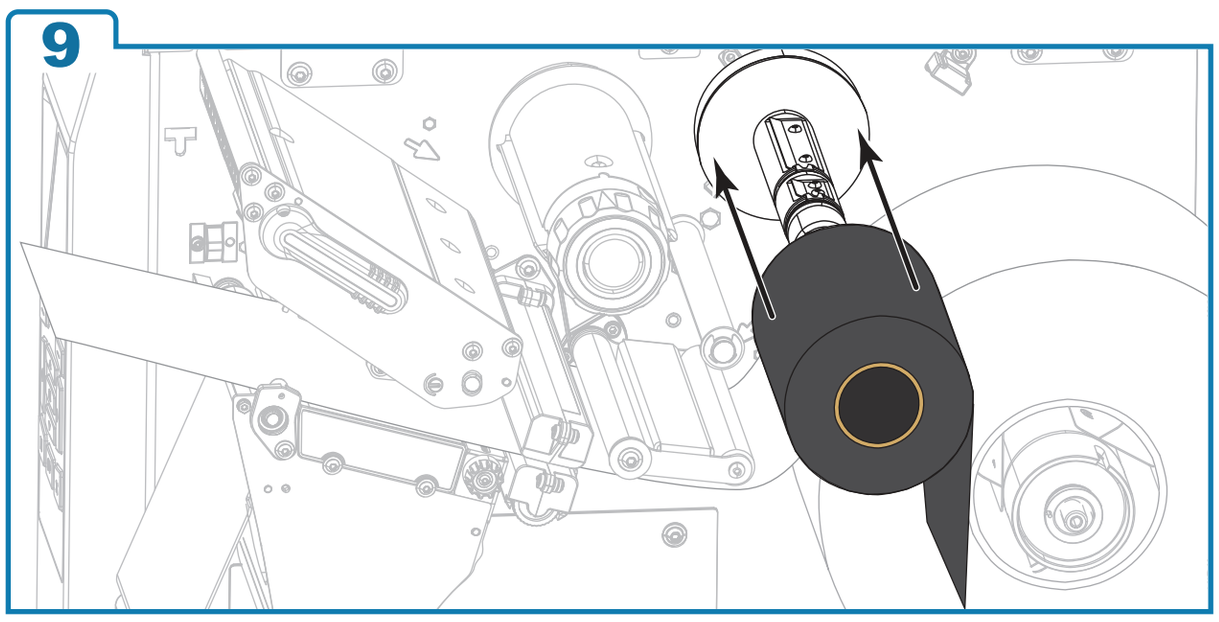

10

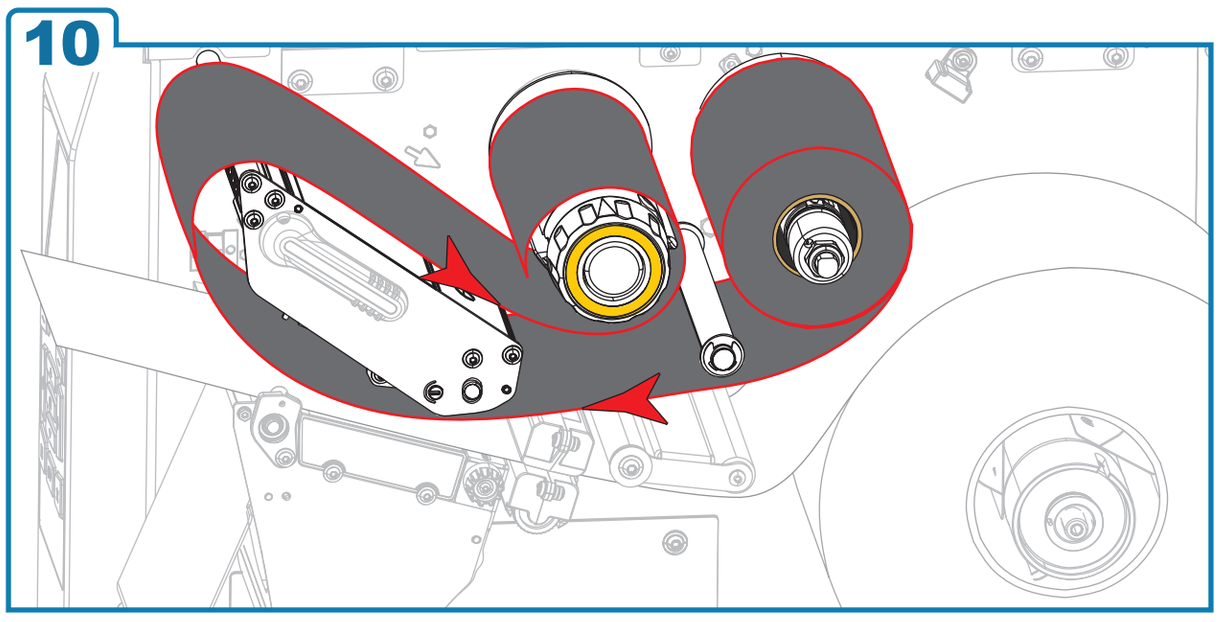

11

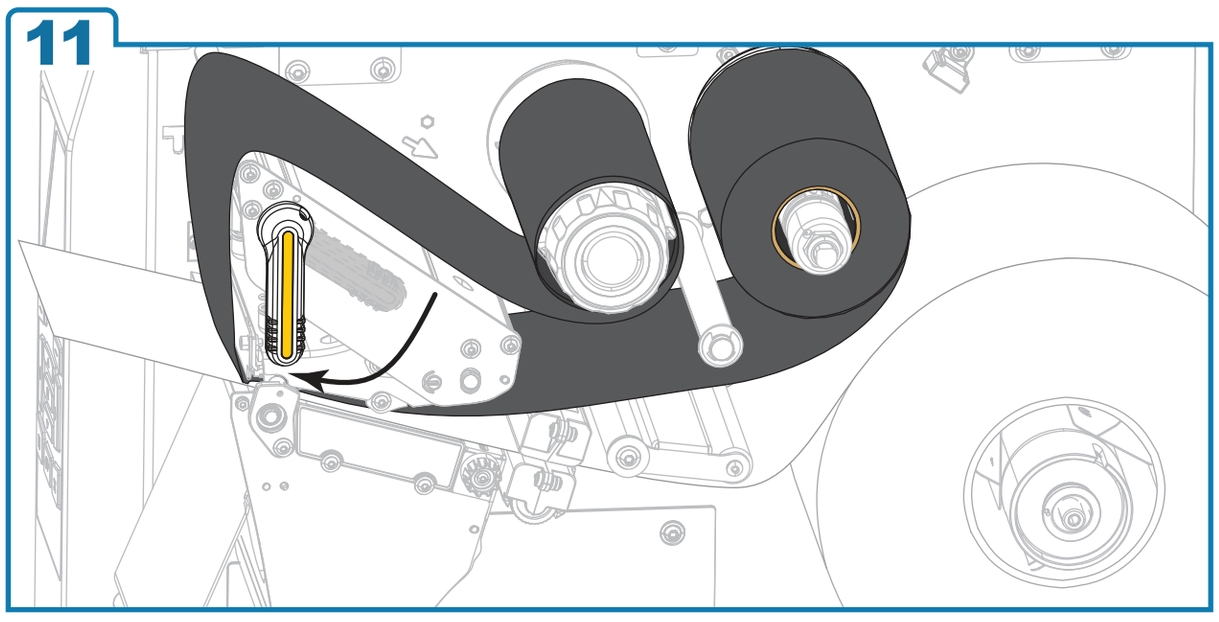

12

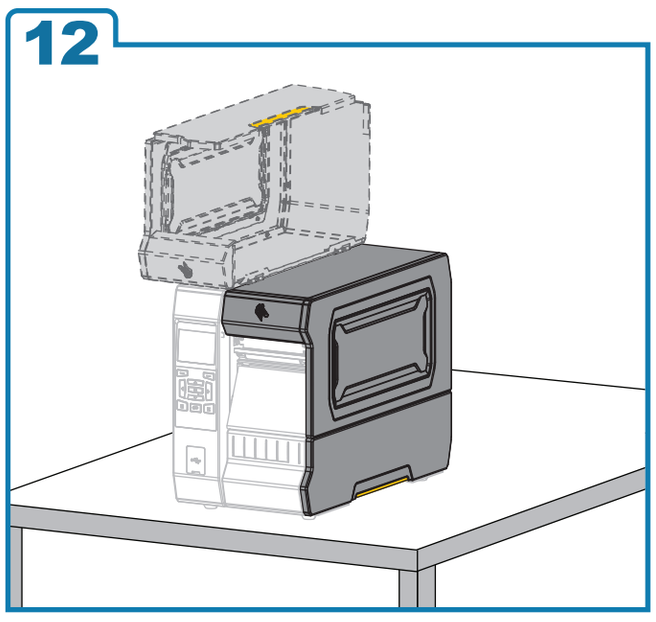

13

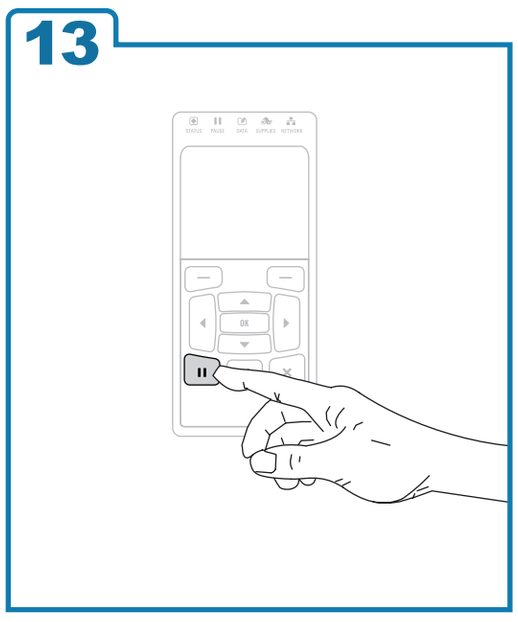

Printed in China on chlorine-free recycled paper.